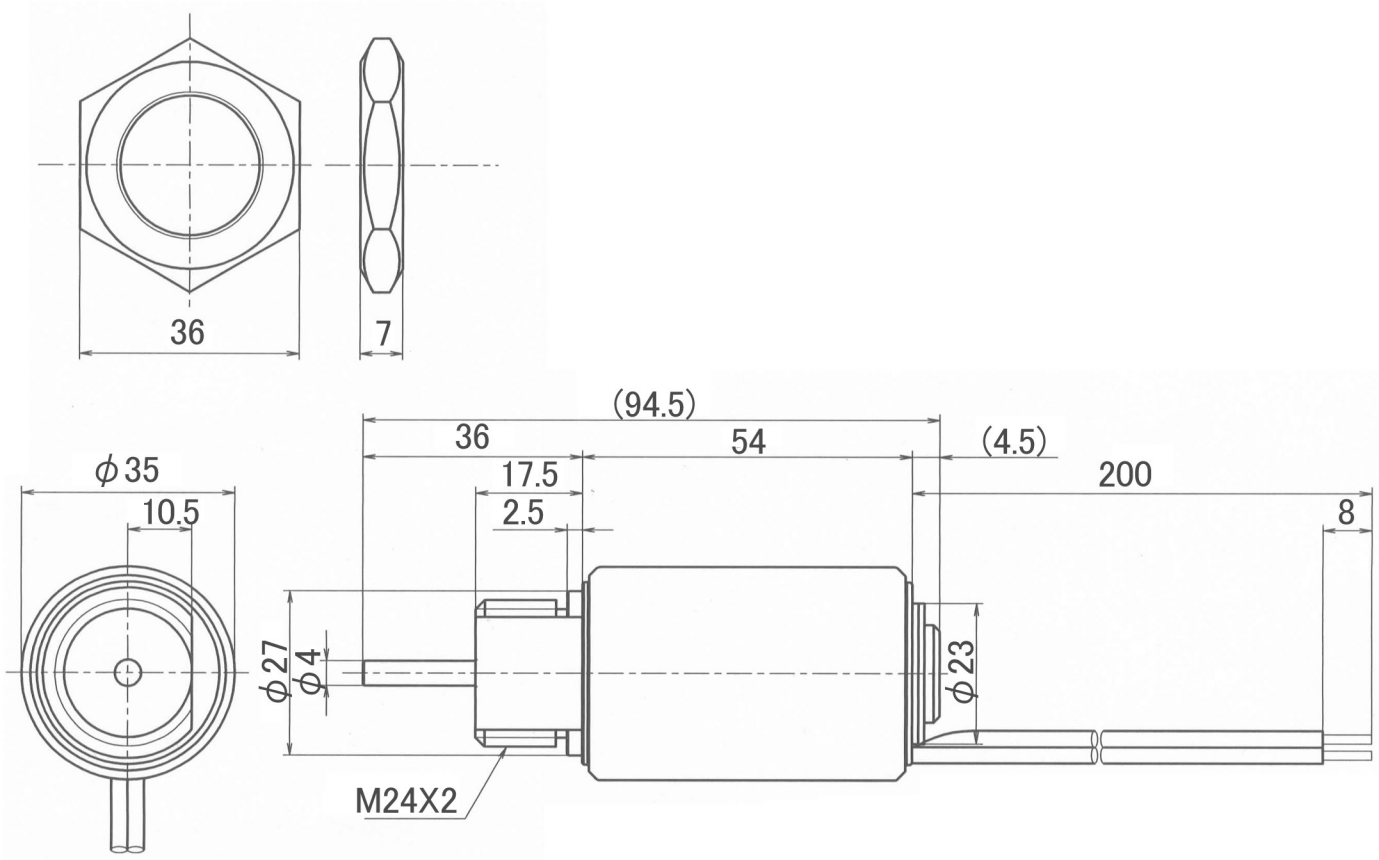TDS-PS3501